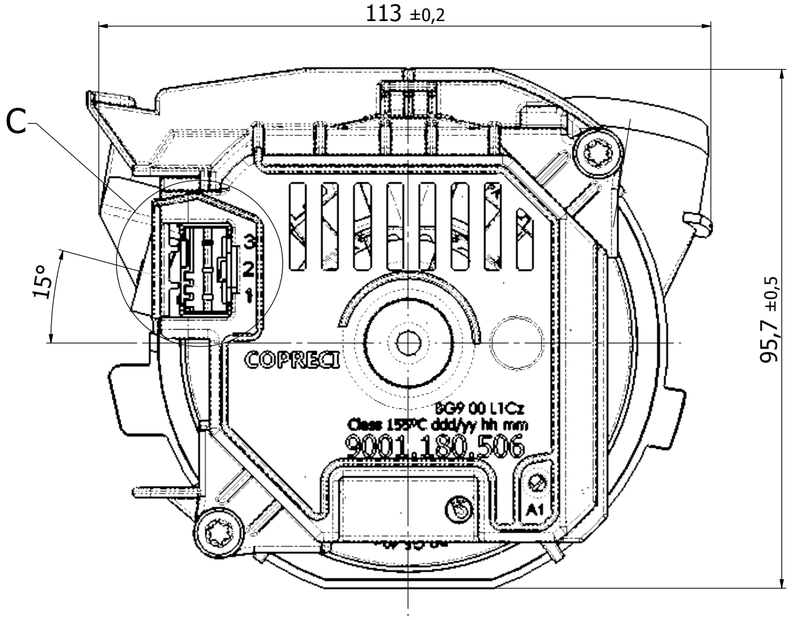

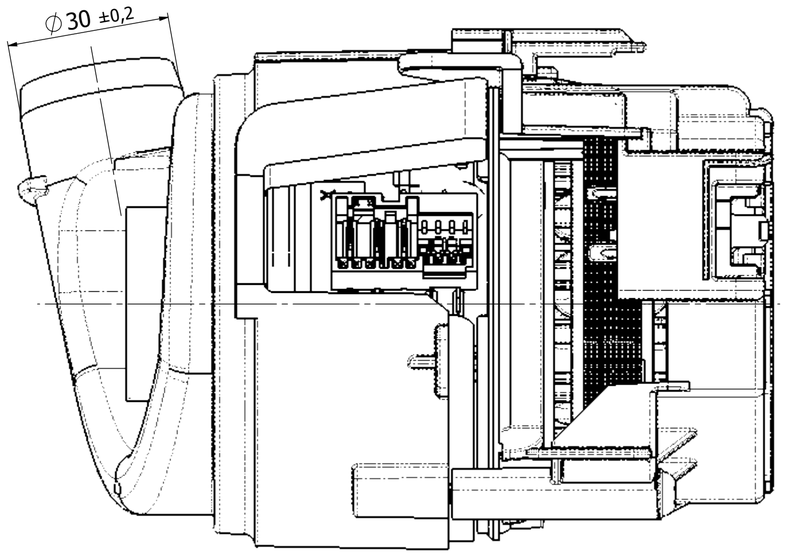

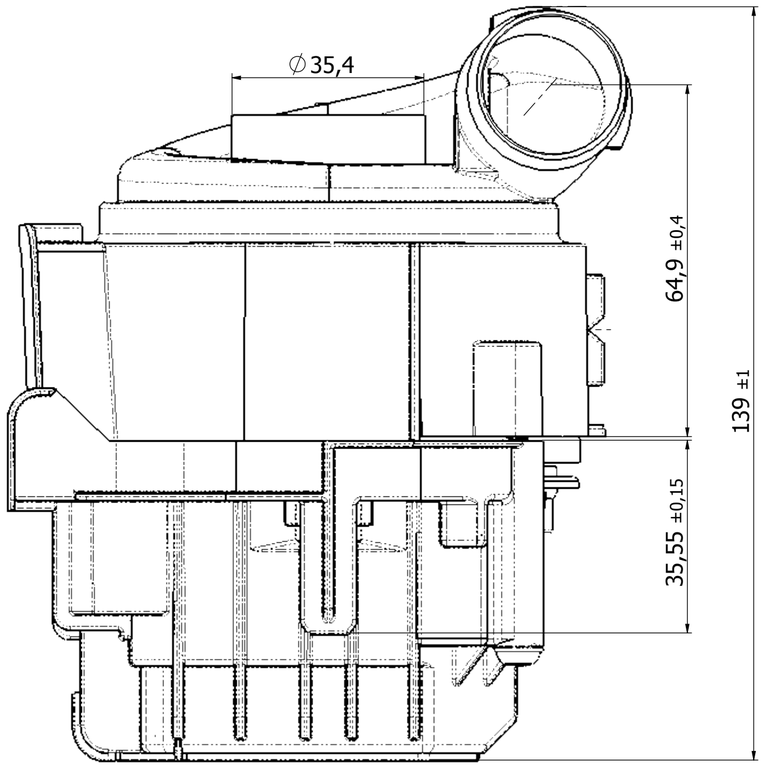

connection diagramm and allocation
Heating system

RAST 5	1	lock: 1+2 Coding: cod 01c 03d Positioning: 2a	PE
	2		L1
	3		N
RAST 2.5	4	coding b,c, available	NTC 1
	5		GND (common contact)
	6		NTC 2

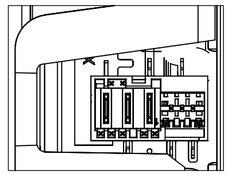

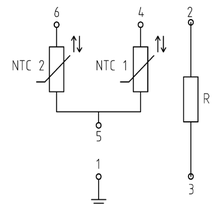

Motor Terminal RAST 2,5
2-3 coding d,e,f available

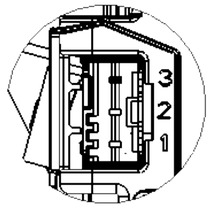

DETALLE C
ESCALA 3 : 2

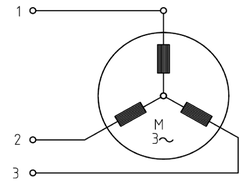

Terminal plug Rast2.5 power,
material CTI-min425V
Safety according IEC 60695-2-12 GWFI-850ºC
IEC 60695-2-13 GWIT min. 775ºC, UL-94 V0

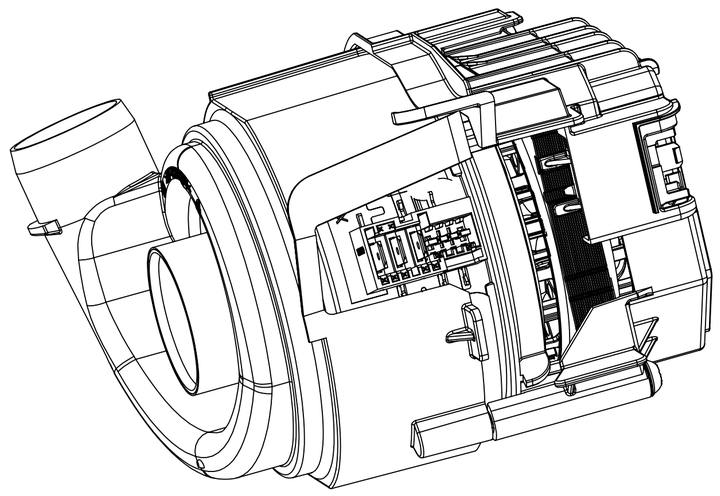

220-240	50/60	< 80W	52,6 ±5%	52,6 ±5%	52,6 ±5%	89±5% (4200 rpm)	9001.180.501	2,08 +5%/-10% (at 230VAC)	BG9 00 L1Cz Class 155ºC ddd/yy hh:mm 9001.180.506
V	Hz	Motor input power	1-2 (Ohm)	2-3 (Ohm)	3-1 (Ohm)	Vrms	Mat.No.	P (kW)	marking of motor
electronic board supply			Winding resistance at 20ºC between two terminals			back E.M.F at 20ºC between two terminals	drawing specification 60100001090352		
							heating system		

Angelu perdoi orokorrak | Tol. gen. angulares | Angular general tolerances

ISO 2768-1	<= 10	>10 to 50	>50 to 120	>120 to 400	>400
m (medium)	±1°	±30'	±20'	±10'	±5'
c (coarse)	±1.5°	±1°	±30'	±15'	±10'

Perdoi orokor linealak | Tolerancias gen. lineales | Linear general tolerances

ISO 2768-1	0,5 to 6	>6 to 30	>30 to 120	>120 to 400	>400 to 1000
f (fine)	±0.05	±0.1	±0.15	±0.2	±0.3
m (medium)	±0.1	±0.2	±0.3	±0.5	±0.8

Neurriak mm-tan
Dimensiones en mm
Dimensions are in mm

Perdoi orokor lineala: / Tolerancia gen. lineal: / *Linear general tolerance:* See table

Angelu perdoi orokorra: / Tol. gen. angular: / *Angular general tolerance:* ±1° (draft angle 0.5°)

Gainazal akabera orokorra: / Acabado superficial gen.: / *General surface finish:* 3.2

A2

Materiala: / *Material:* Material <sin especificar>

Eskala: / Escala: / *Escale:* 2.5:1

VALID ONLY APPROVED DOCUMENTS

Azken kolaboratzailea: / Ultimo colaborador: / *Last contributor:*

RoHS BETETZEN DU | CUMPLIMIENTO RoHS |RoHS COMPLIANCE

Dokumentu zk.: / Nº de documento: / *Document No.:*

Data: / Fecha: / *Date:*

Egoera: / Estado: / *State:*

Erreferentzia: / Referencia: / *Reference:* 84800079

Ber. / Ver. / *Ver.*